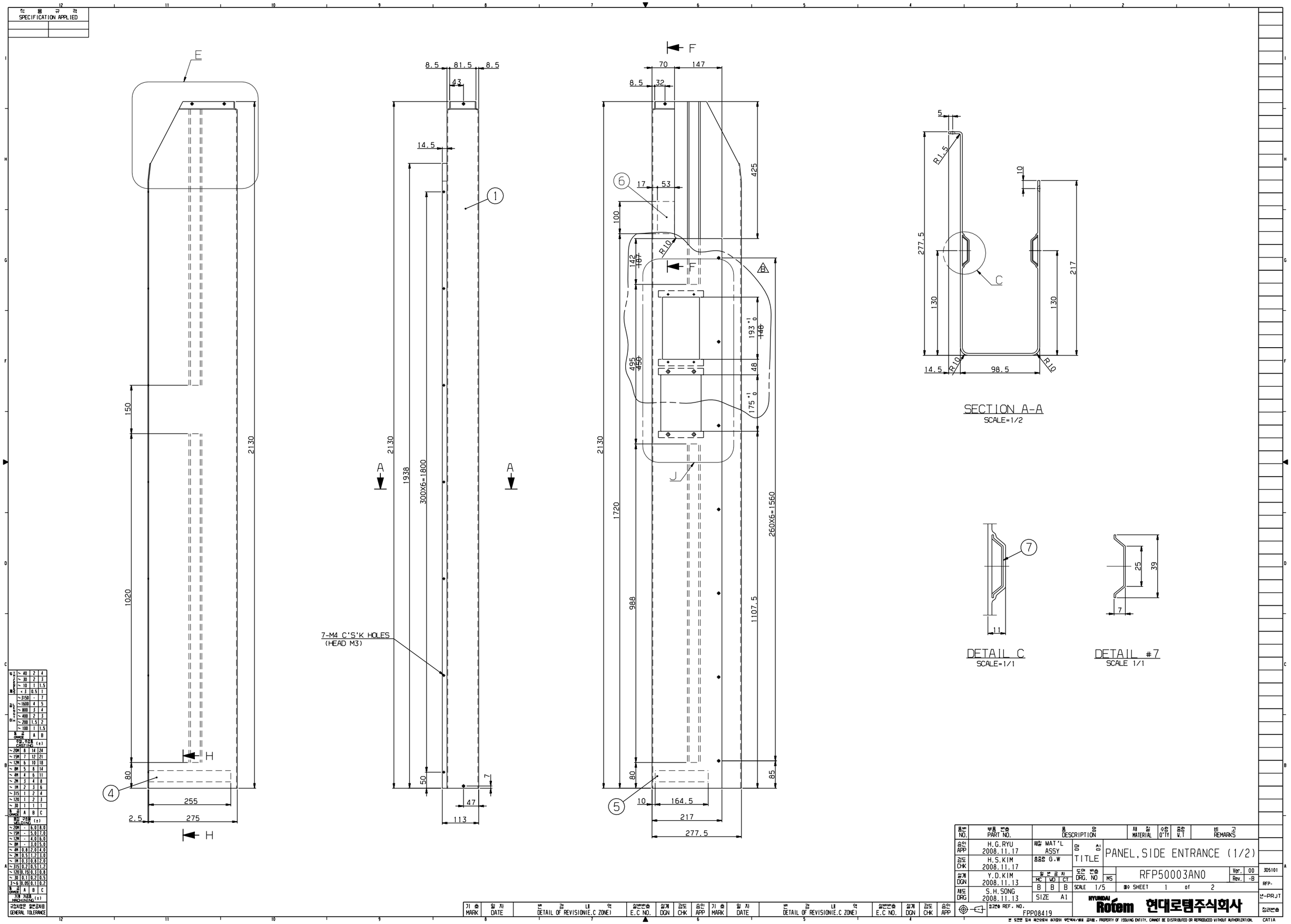

SPECIFICATION APPLIED
SECTION A-A
SCALE=1/2
DETAIL C
SCALE=1/1
DETAIL #7
SCALE 1/1
7-M4 C'S'K HOLES
(HEAD M3)
300X6=1800
260X6=1560
PART NO.
DESCRIPTION
MATERIAL
Q'TY
REMARKS
H.G.RYU
2008.11.17
H.S.KIM
2008.11.17
Y.D.KIM
2008.11.13
S.H.SONG
2008.11.13
MAT'L
ASSY
G.W
TITLE
PANEL, SIDE ENTRANCE (1/2)
DRG. NO
RFP50003AN0
SCALE 1/5
SHEET 1 of 2
SIZE A1
FPP08419
HYUNDAI Rotem 현대로템주식회사
3D5101
RFP-
CATIA